Printed in Korea.

Frigo

INSTRUCTION MANUAL

Portable 5-inch Black & White Television

BT-100

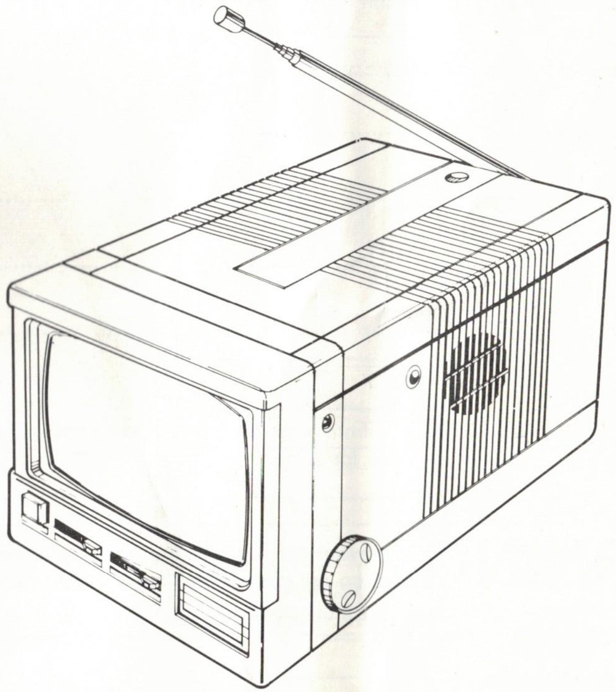

Read these instructions completely before operating this receiver.

Contents

Controls and Functions ······ 3 – 5

Antennas

TV Rod Antenna ······ 5

External Antenna ······ 5 – 6

Three Way Power Supply

AC Power (House current) Operation ······ 6

Car Battery Operation ······ 7

Dry Battery Operation ······ 8

Operating Procedure ······ 9

In Case of Difficulty ······ 10

Specifications ······ 11

Safety Instructions ······ 12 – 14

CAUTION : Remove AC adaptor from wall outlet and battery from receiver when receiver is not in use for a long period.

WARNING To prevent damage which may result in fire or shock harzard, do not expose this appliance to rain or moisture.
Warning High Voltage : Live parts are accessible when the upper cover is removed.

Controls and Functions

Front View

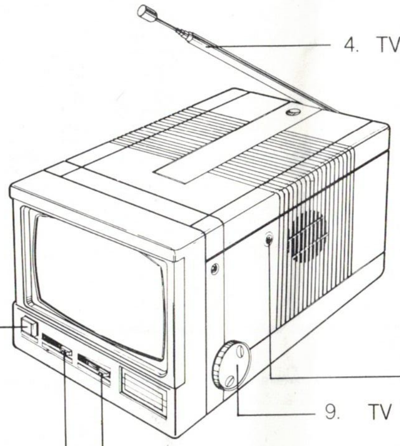

Rear View

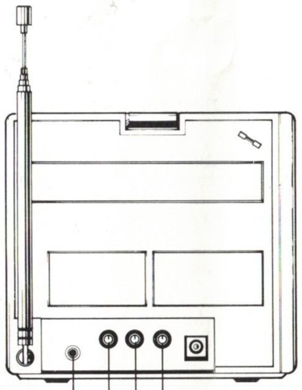

1. **ON/OFF Power Switch.**
Push button to turn set on, Push it again to turn set off.

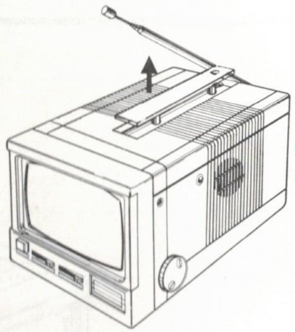

2. **TV Band Selector.**
Set this selector to the desired TV Band 〈VHF (L),VHF(H),UHF〉

3. **VOLUME Control.**
Slide in either direction to adjust volume.

4. **TV Rod Antenna.**
This antenna is for VHF, UHF channel reception, Refer to antenna section 3 on page 5.

5. **VERTICAL HOLD Control.**
Adjust this control to stop the picture "rolling" either up or down as shown in the illustration.

6. **CONTRAST Control/Black Level.**
Adjust this control to vary the contrast between dark and light scenes.

7. **BRIGHTNESS Control/White Level.**
Adjust this control to change the overall brightness of the picture.

8. **EXTERNAL ANTENNA JACK.**
Where receiving conditions are unfavorable, an external antenna should be used.
   1. Connect the cable to the matching unit (standard accessory)as shown.
   2. Insert the plug of the matching unit into the antenna jack of the set as shown.

9. **TV Tuning Control.**
Rotate this control to set the pointer to the desired channel on the tuning indicator.

10. EARPHONE JACK.
Inserting the earphone plug into this jack will cut off the speaker and allows personal listening. Remove earphone to restore speaker sound.

CAUTION
Before you adjust Horizontal Hold, determine the symptoms and make the few simple checks shown below.
1. Adjust the Tuning Control knob to the desired channel.
2. Adjust the Antenna for good picture quality.
3. Check the power source.

Antennas

TV Rod Antenna

In a normal reception area, the TV rod antenna will deliver a sharp picture and clear sound. Adjust the length, direction and angle as shown.

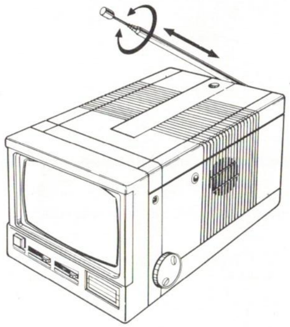

NOTE : Avoid pushing the top section of the antenna.

External Antenna

An Antenna matching unit is available in the event receiving conditions at your location are unfavorable and an external antenna is required for satisfactory TV reception.

Steps(1)to(2)

(1)Connect the cable to the matching unit as shown.

(2)Insert the plug of the matching unit into antenna socket of receiver as shown.
How to use matching unit.

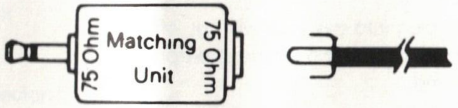

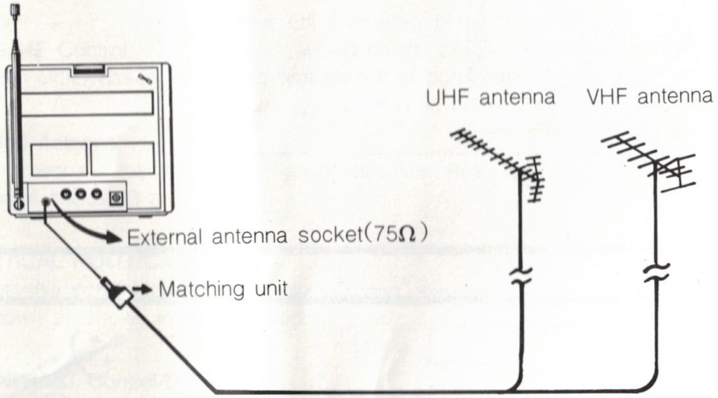

Three Way Power Supply

AC Power (House Current) Operation

Connect the DC plug coming out of the AC adaptor into the DC-12V jack on the rear of the set. Then plug the two-prongled plug into standard 220 volt AC wall outlet.

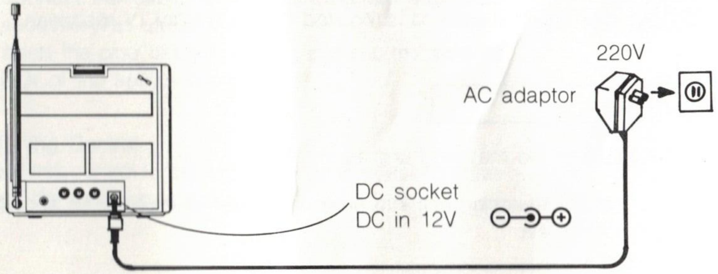

CAUTION : Remove the batteries when receiver is operating from AC power for a long time.

Car Battery Operation

To install your car battery power first remove the cigarette lighter from its socket in your vehicle, plug the torpedo-shaped carcord into the socket. Make sure to push it all the way in. Now plug the small end of the adaptor into "DC-12V" jack on the rear of the receiver.The set will now operate on the 12V current from your vehicle. Use only car battery cord supplied.

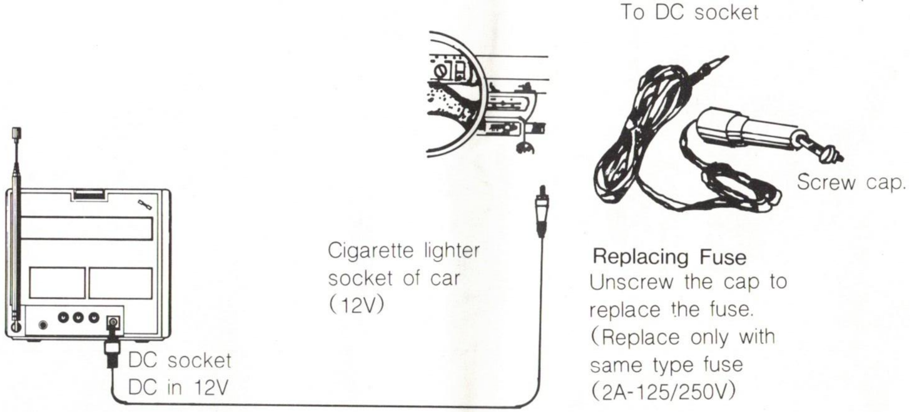

Replacing Fuse
Unscrew the cap to replace the fuse. (Replace only with same type fuse (2A-125/250V)

CAUTION : Remove plug from cigarette lighter receptacle when receiver is not used.

Dry Battery Operation

Installation

Steps(1)to(3)

(1)Press Down on the battery cover in the area indicated and slide cover off.
(2)Insert 8"D" size batteries (optional) as shown. (BE SURE TO OBSERVE POLARITY)
(3)Replace the cover.

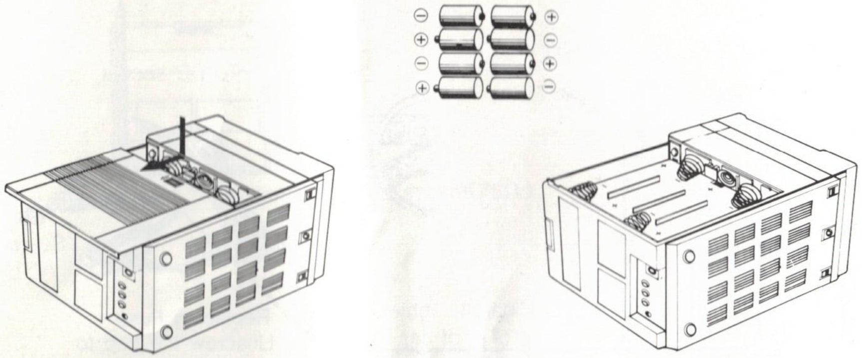

NOTE:

1. When the battery power is low, the picture will shrink. Replace the batteries with fresh ones or remove them from the receiver.
2. The DC plug from the car cord, or the AC adaptor must be removed from the DC socket to operate on the batteries in the receiver.
3. Replace with equivalent type batteries (standard zinc carbon or alkaline types). DC not mix batteries of different composition.

Average Operating Time
(Continuous usage at 70°F/21°C room temperature)

Recommended Type	DM-1 (Zinc Carbon)	Super Alkaline
Time(Up to)	1hrs	4hrs

NOTE: Dry battery operating time and efficiency decrease at low temperatures (usually below +41°F/5°c).

Operating Procedure

TV Operation

1. Push button to turn set on. Push it again to turn set off.
2. Place the band Selector to one of TV Band VHF(L),VHF(H),UHF position
3. Adjust the tuning control to desired channel on channel indicator.
4. Adjust the Antenna. Refer to antenna section on page 5
5. Adjust Slide-Volume control to your preferred listening level, other controls (vertical hold brightness and contrast) refer to control and function section on page 4.

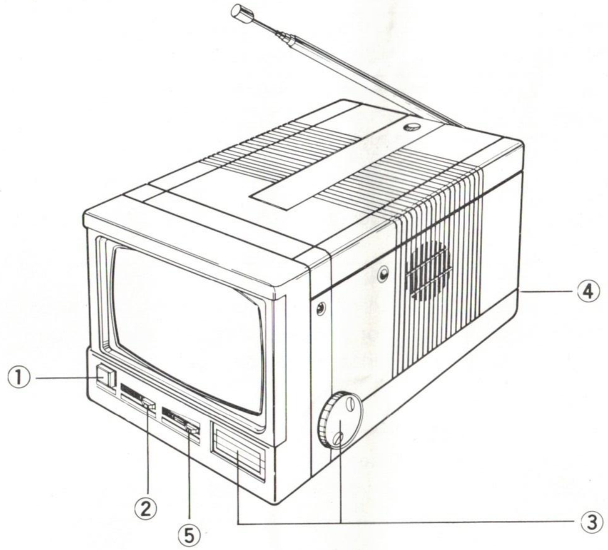

In Case of difficulty

If your set fails to operate properly, check the following points before seeking service.

Problems	Possible Causes	Refer to
No power	• AC adaptor cord not plugged in. • Car cord not properly connected. • Improper battery installation.	7 7 8
No operation No operation on batteries	• AC adaptor or car cord not plugged in. • Improper battery installation. • Batteries weak.	6,7 8 8
Normal sound,dim picture	• Improper brightness control setting.	4
Background noise, scrambled picture	• TV tuning incorrect. • Improper vertical hold control setting.	3,8 4
Normal sound, Multiple image (ghosting)	• Antenna direction.	6
Background noise, Snow picture	• Antenna Connection. • Antenna Matching unit plugged in.	6 6
Picture too bright, Picture too dark.	• Check brightness and contrast setting	4
Picture smaller than screen or volume weak even when set on high volume.	• Replace or recharge batteries. If using DC adaptor check car battery for power. If using AC adaptor house voltage may be tool low.	7,8

NOTE : If you have problems that can not be easily corrected, disconnect the AC adap tor or car cord plug and call your local dealer or service center.

Specifications

Power Source	: AC : 220V, 50Hz DC : 12V 780mA Adaptor(DC 12V : Car Battery, Dry Cells Dry or Rechargeable Battery)
Power Consumption	: AC : 16Watts at 220V DC : 7Watts at 12V
Antenna	: TV Rod Antenna (75Ω) TV External Antenna (75Ω-75Ω)
Receiving Channel	: VHF: V/Low2 - 4. V/High 5 - 12 UHF : 21 - 69CH
Receiving System	: NTSC
Intermediate Frequency	: Video : 38.9MHz Sound : 33.4MHz
Picture Tube	: 140AHB5.5" 70° Deflection
Nominal Anode Voltage	: 7.0KV (Zero Beam Current)
Speaker	: 2½ Inches 16Ω Round Type
Audio Output	: 0.6W Maximum (100% Modulation)
Automatic Circuit	: Keyed Automatic Gain Control Saw-Tooth Automatic Frequency Control Automatic Voltage Regulator
Semi Conductor	: IC : 5pcs. TR : 8pcs. Diode : 15pcs.
Dimensions	: Width : 140m/m Depth : 220m/m Height : 148m/m
Weight	: 1.4Kg

Accessory

AC Adaptor
Car Battery Cord
Ant Matching Unit

Safety Instructions

1. Save these instructions for later use.
2. Unplug this television receiver from the wall outlet before cleaning. Do not use liquid cleaners or aerosol cleaners. Use a damp cloth for cleaning.
3. Do not use attachments not recommended by the television receiver manufacturer as they may cause hazards.
4. Do not use television receiver near water,for example, near a bathtub, washbowl, kitchen sink, or laundry tub, in a wet basement, or near a swimming-pool,etc.
5. Do not place this television receiver on an unstable cart, stand, or table. The television receiver may fall, causing serious injury to a child or adult, and serious damage to the appliance. Use only with a cart or stand recommended by the manufacturer.
6. Slots and openings in the cabinet and the back or bottom are provided for ventilation, and to ensure reliable operation of the television receiver and to protect it from overheating, these openings must not be blocked or covered. The openings should never be blocked by placing the television receiver on a bed, sofa, rug, or other similar surface. This television receiver should never be placed near or over a radiator or heat register. This television receiver should not be placed in a built-in installation such as a bookcase unless proper ventilation is provided.
7. This television receiver should be operated only from the type of power source indicated on the rating label. If you are not sure of the type of power supplied to your home, consult your television dealer or local power company. For television receivers designed to operate from battery power, refer to the operating instuctions.
8. This television receiver is equipped with a polarized alternating-current line plug (a plug having one blade wider than the other). This plug will fit into the power outlet only one way. This is a safety feature. If you are unable to insert the plug fully into the outlet, try reversing the plug. If the plug should still fail to fit, contact your electrician to replace your obsolete outlet. Do not defeat the safety purpose of the polarized plug.
9. Do not allow anything to rest on the power cord. Do not locate this television receiver where the cord will be abused by persons walking on it.
10. Follow all warnings and instructions marked on the television receiver.

11. If an outside antenna is connected to the television receiver, be sure the antenna system is grounded so as to provide some protection against voltage surges and built up static charges. Section 810 of the National Electrical Code, NFPA No. 70-1975, provides information with respect to proper grounding of the mast and supporting structure, grounding of the lead-in wire to and antenna discharge unit, size of grounding conductors, location of antenna and requirements for the grounding electrode. See Figure 82 :1

FIGURE 82.1
EXAMPLE OF ANTENNA GROUNDING ACCORDING TO
NATIONAL ELECTRICAL CODE INSTRUCTIONS

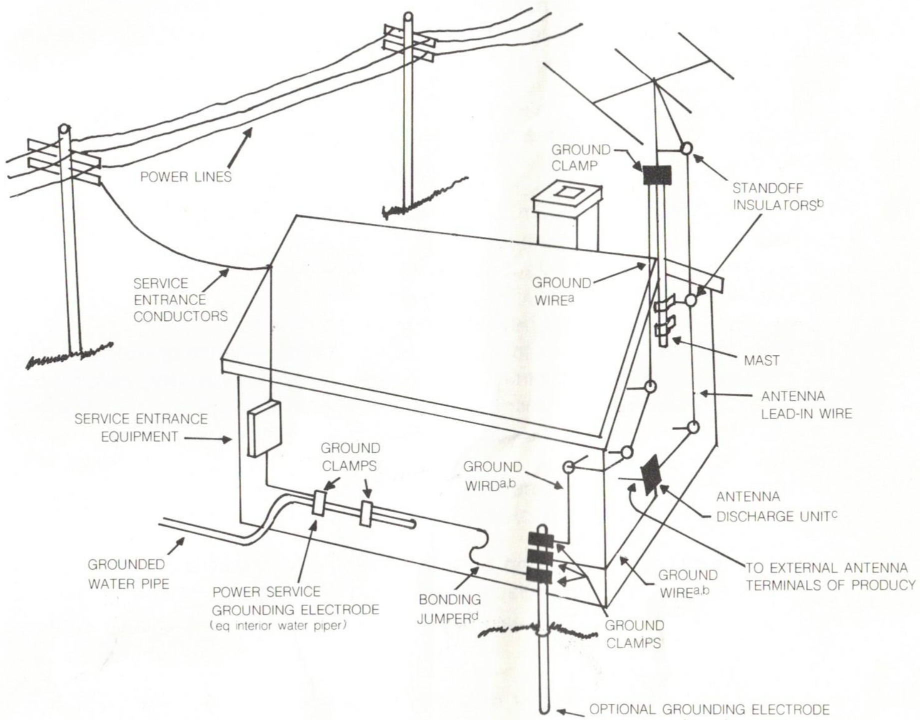

a. Use No. 10 AWC ($5.3mm^2$)copper. No 8 AWG ($8.4mm^2$) aluminum. No 17 AWG ($1.0mm^2$)copper-clad steel or bronze wire, or larger, as a ground wire.

b. Secure antenna lead-in and ground wires to honse with stand-off insulators spaced from 4-6 feet (1.22-1 83m) apart.

c. Mount antenna discharge unit as close as possible to where lead-in enters house.

d. Use jumper wire not smaller than No. 6 AWG (13.3(mm^2) copper,or the equivalent. When a separate antenna-grounding electrode is used.

12. For added protection for this television RECEIVER during a lightning storm, or when it is left unattended and unused for long periods of time, unplug it from the wall outlet and disconnect the antenna. This will prevent damage to the RECEIVER due to lightning and powerline surges.

13. An outside antenna system should not be located in the vicinity of overhead power lines or other electric light or power circuits, or where it can fall into such power lines or circuits. When installing an outside antenna system, extreme care should be taken to keep from touching such power lines or circuits as contact with them might be fatal.

14. Do not overload wall outlets and extension cords as this can result in fire or electric shock.

15. Never push objects of any kind into this television receiver through cabinet slots as they may touch dangerous voltage points or short out parts that could result in a fire or electric shock. Never spill liquid of any kind on the television receiver.

16. Do not attempt to service this television receiver yourself as opening or removing½ covers may expose you to dangerous voltage or other hazards. Refer all servicing to qualified service personnel.

17. Unplug this television receiver from, the wall outlet and refer servicing to qualified service personnel under the following conditions.
    a. When the power cord or plug is damaged or frayed.
    b. If liquid has been spilled into the television receiver.
    c. If the television receiver has been exposed to rain or water.
    d. If the television receiver does not operate nomally by following the operating instructions. Adjust only those controls that are covered by the operating instructions as improper adjustment of other controls may result in damage and will often require extensive work by a qualified technician to restore the television receiver to normal operation.
    e. If the television receiver has been dropped or the cabinet has been damaged.
    f. When the television receives exhibit a distinct change in performance.

18. When replacement parts are required, be sure the service technician has used replacement parts specified by the manufacturer that have the same characteristics as the original part. UNAUTHORIZED substitutions may result in fire, electric shock, or other hazards.

19. Upon completion of any service or repairs to this television receiver, ask the service technician to perform routine safety checks to determine that the television is in safe operation condition.